CF

CONSTRUCTION FENCE

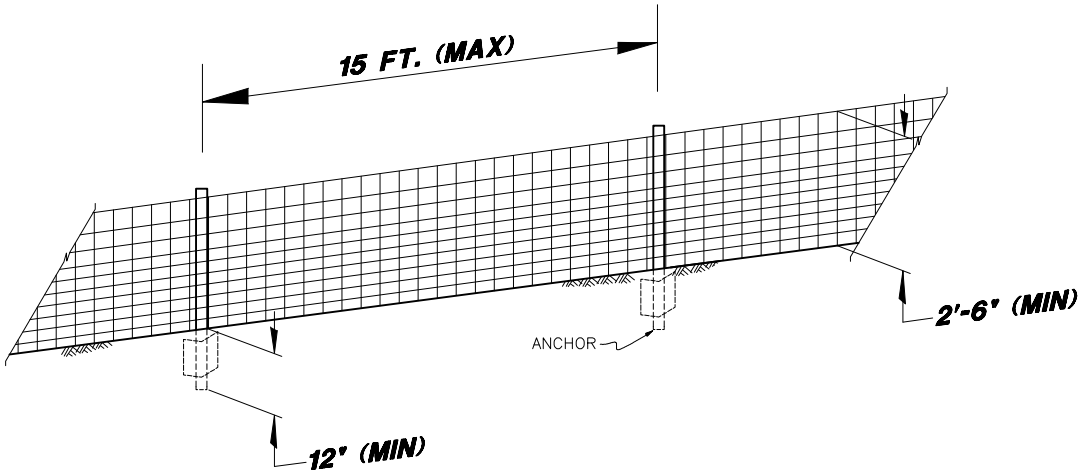

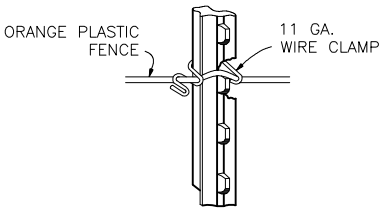

TIES FOR "STUDDED TEE"

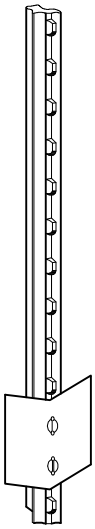

"STUDDED TEE" LINE POST

	STANDARDS & SPECIFICATIONS	REVISED:	CONSTRUCTION FENCE
DATE:		DRAWING NO. 600-03	