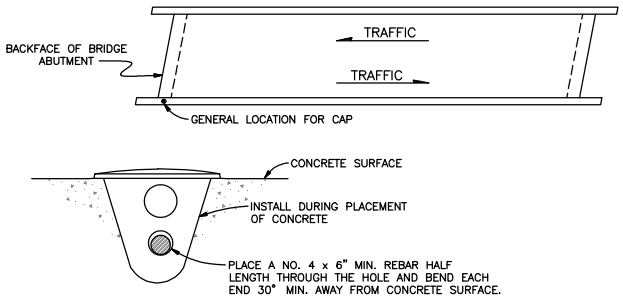

TYPE 4 MONUMENT

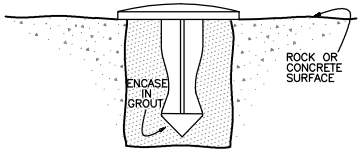

TYPE 5 MONUMENT

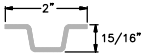

DELINEATOR POST
SECTION C–C

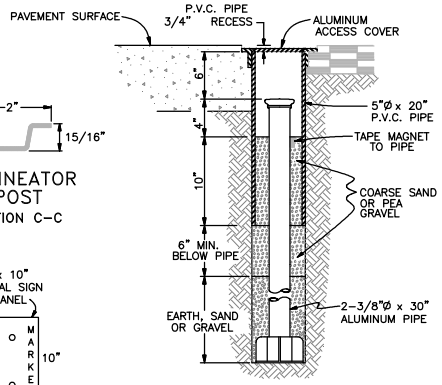

TYPE 3A MONUMENT,
ROADWAY INSTALLATION

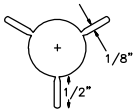

SECTION A–A

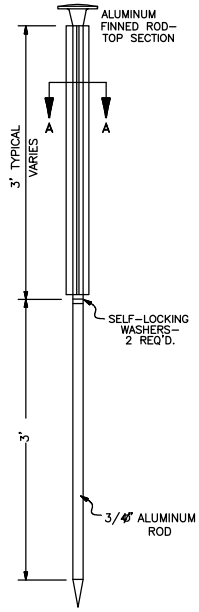

TYPE 2 MONUMENT

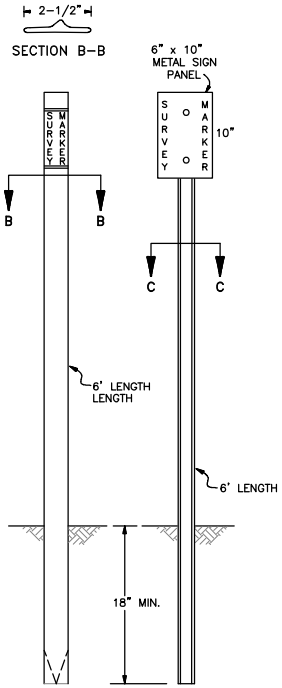

WITNESS POSTS

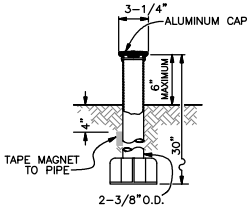

TYPE 3 MONUMENT

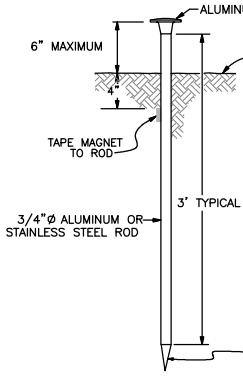

TYPE 1 MONUMENT

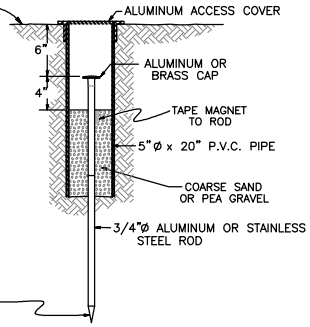

TYPE 1A MONUMENT & TYPE 2A MONUMENT
INCLUDES MONUMENT BOX

DIMENSIONS ARE INCHES (")
UNLESS OTHERWISE NOTED.

STANDARDS & SPECIFICATIONS

REVISED:

DATE:

DRAWING NO. 500–31

SURVEY MONUMENTS
SHEET 2 OF 2