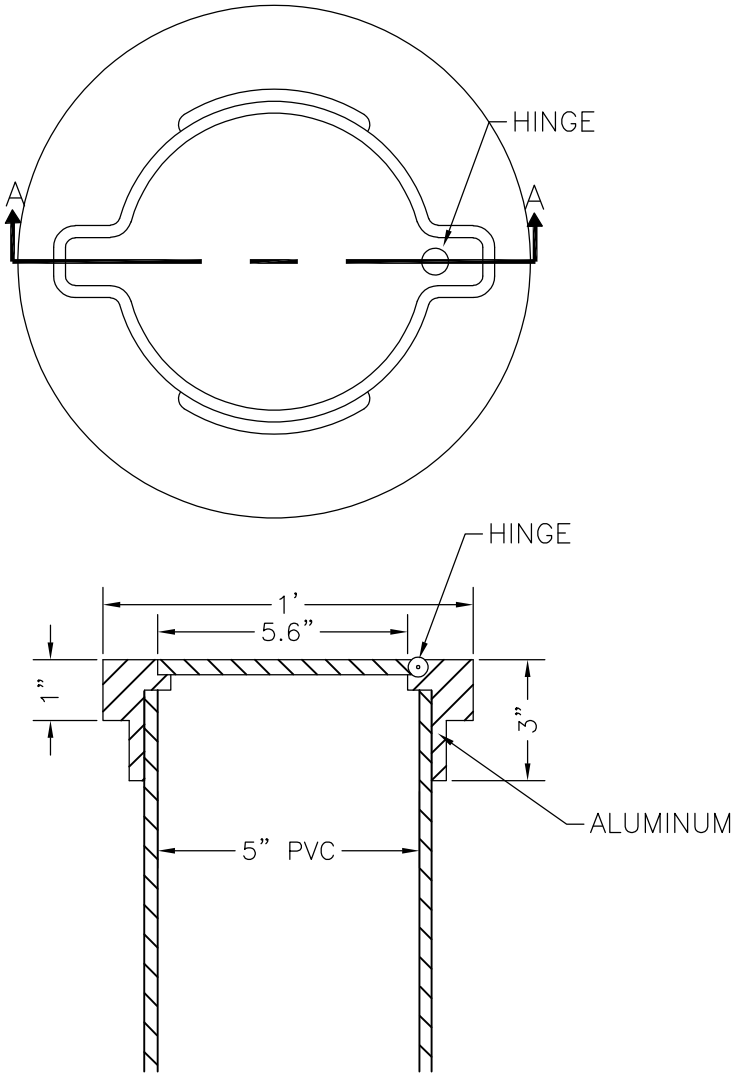

SECTION A–A

	STANDARDS & SPECIFICATIONS	REVISED:	HINGED TYPE ALUMINUM MONUMENT BOX
DATE:		DRAWING NO. 500–29	