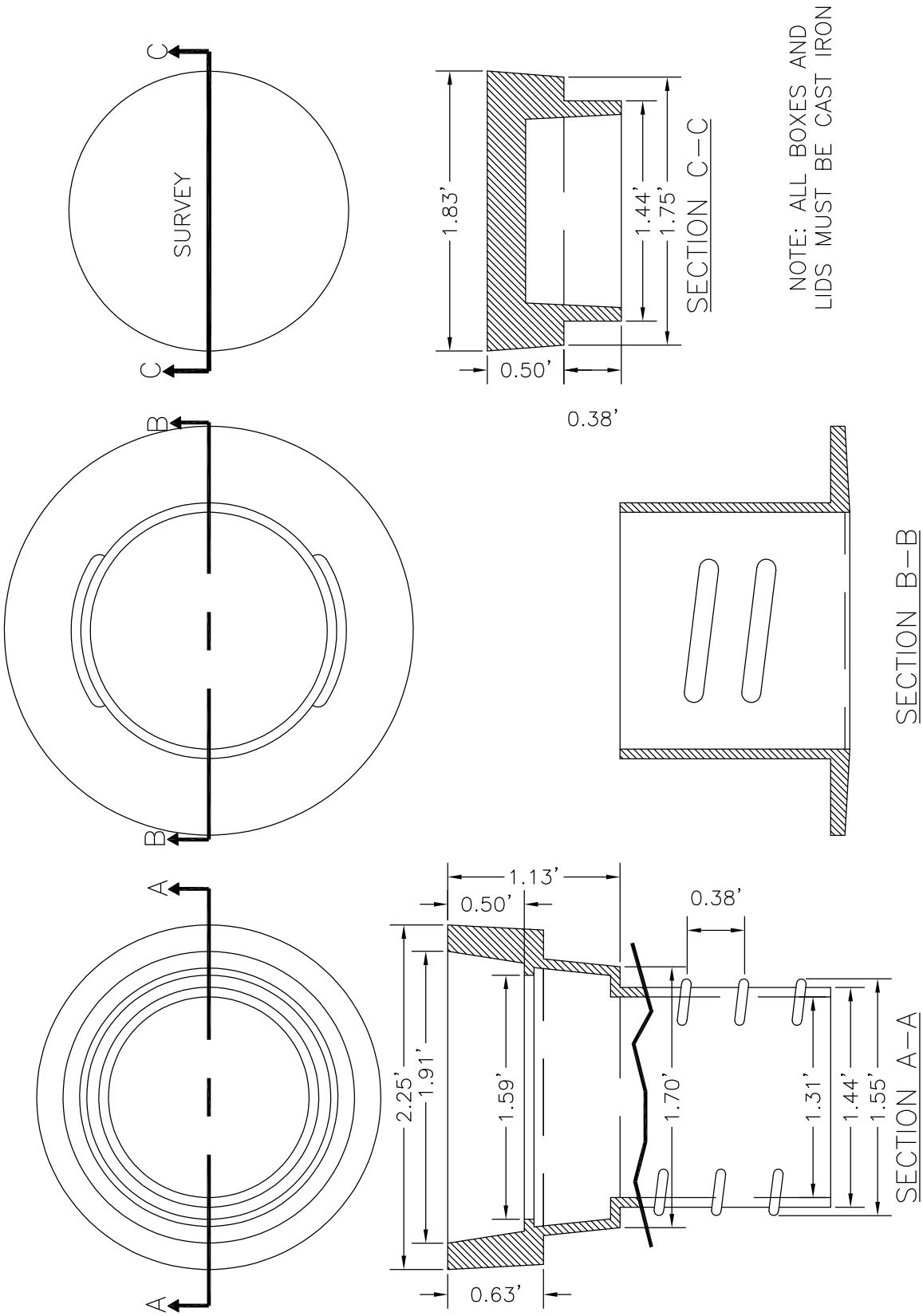

STANDARDS & SPECIFICATIONS

REVISED:

DATE:

DRAWING NO. 500–28

SCREW TYPE ADJUSTABLE MONUMENT BOX