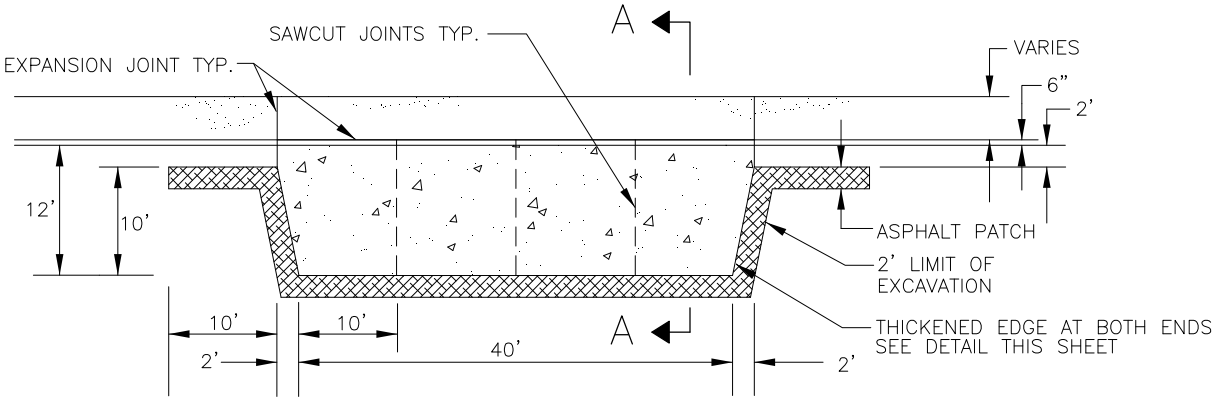

PLAN

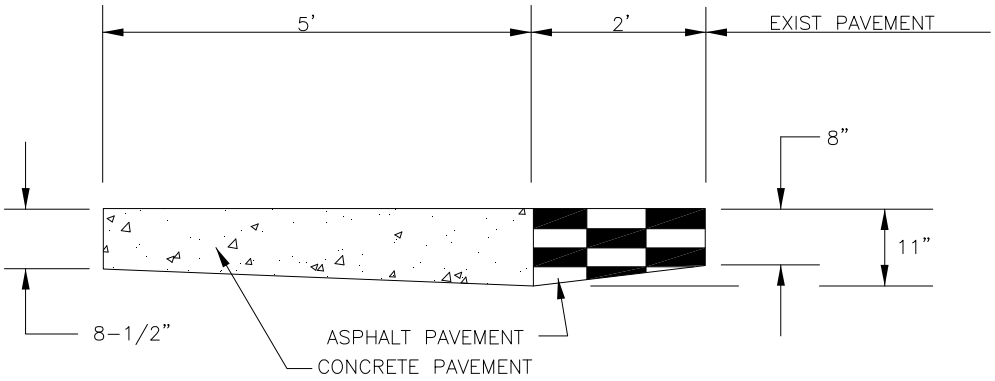

THICKENED EDGE

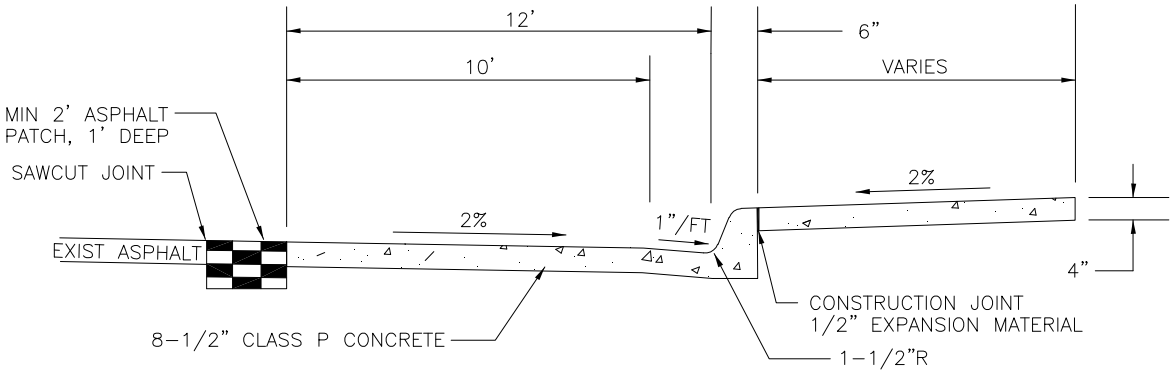

SECTION A–A

N.T.S.

	STANDARDS & SPECIFICATIONS	REVISED:	CONCRETE BUS PAD
DATE:		DRAWING NO. 500–22	