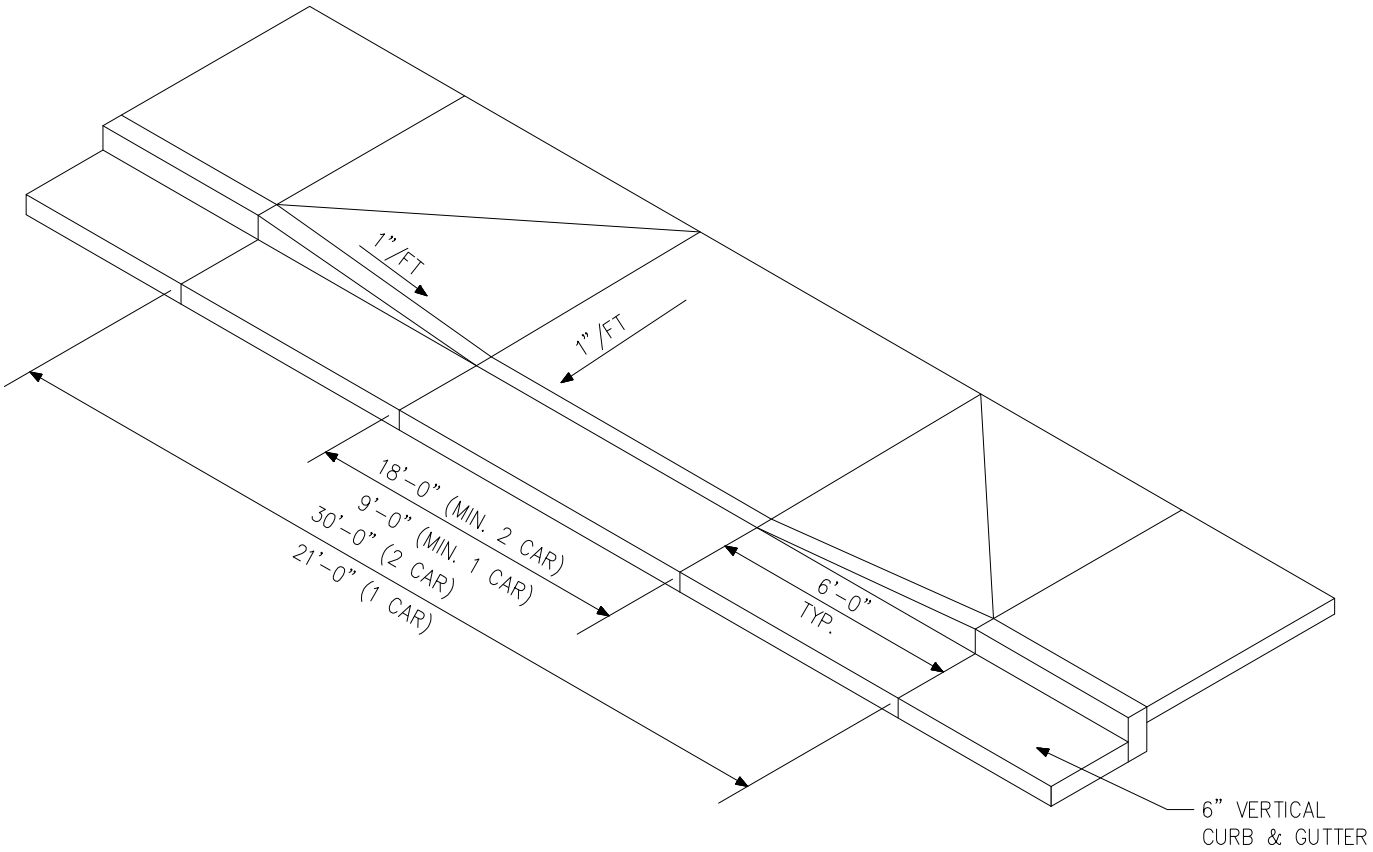

N.T.S.

	STANDARDS & SPECIFICATIONS	REVISED:	DRIVEWAY APRON ARTERIAL/COLLECTOR STREET
DATE:		DRAWING NO. 500-21	