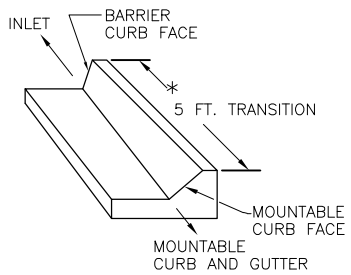

TRANSITION CURB

MEET SHAPE OF NORMAL BARRIER

See Channel Layout on Sheet 2.

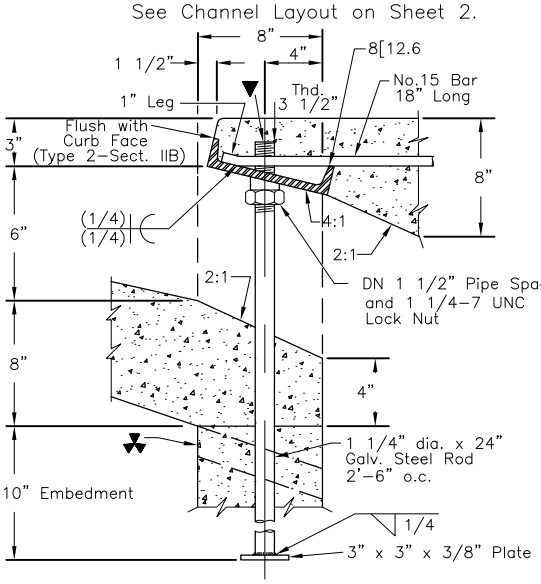

▼CURB FACE ASSEMBLY,

PLACE ENTIRE ASSEMBLY BEFORE POURING CONCRETE

▲ – FOR A 1'-0" PAN SLOPE 6:1

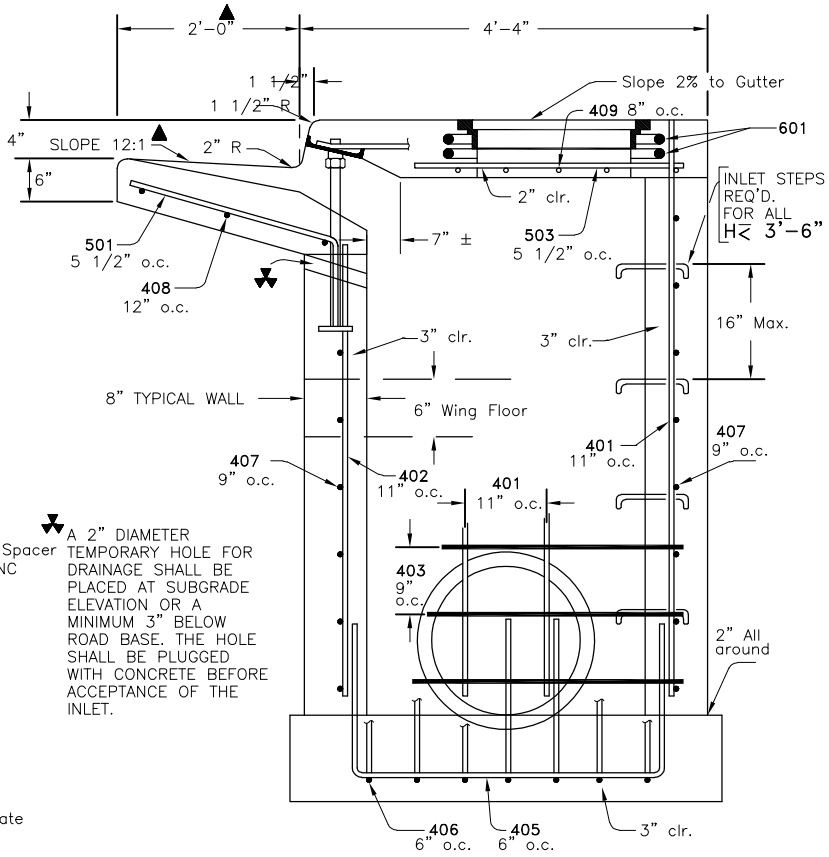

▼ A 2" DIAMETER TEMPORARY HOLE FOR DRAINAGE SHALL BE PLACED AT SUBGRADE ELEVATION OR A MINIMUM 3" BELOW ROAD BASE. THE HOLE SHALL BE PLUGGED WITH CONCRETE BEFORE ACCEPTANCE OF THE INLET.

SECTION B–B

TYPICAL END VIEW

NOTE: MANHOLE RING & COVER, STATION POINT AND OUTFLOW PIPE SHALL BE LOCATED AT THE SAME END OF THE INLET.

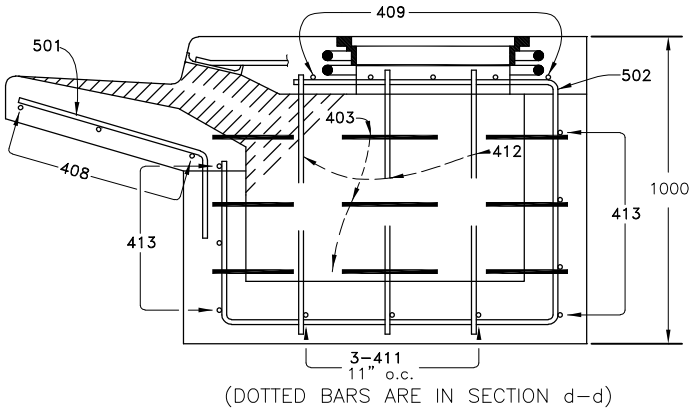

(DOTTED BARS ARE IN SECTION d–d)

SECTIONS c–c & d–d

N.T.S.

	STANDARDS & SPECIFICATIONS	REVISED:	CURB INLET TYPE R SHEET 2 OF 4
DATE:		DRAWING NO. 400–37	