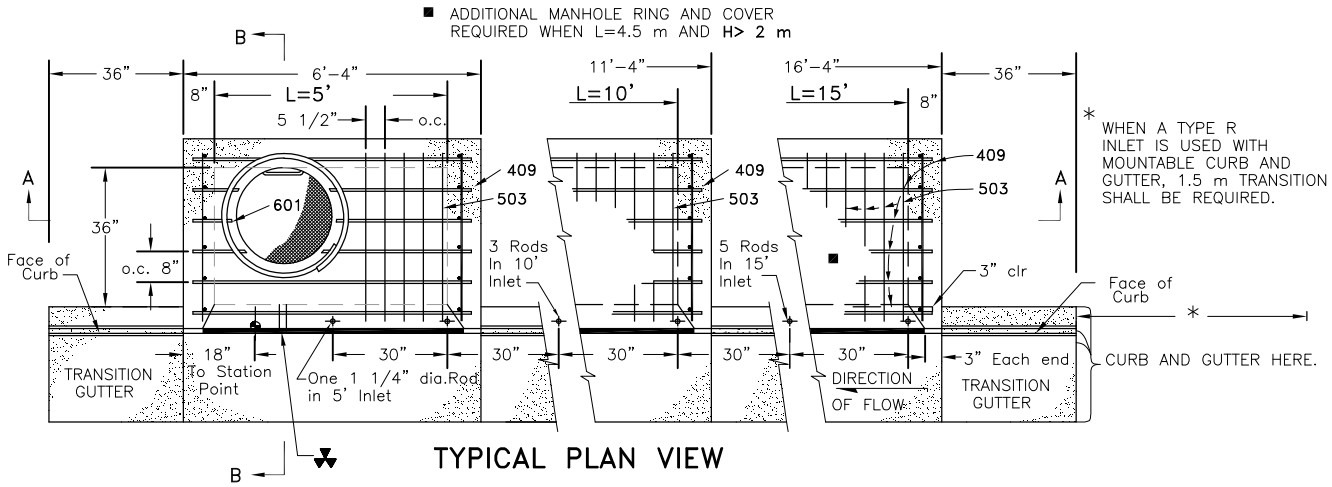

TYPICAL PLAN VIEW

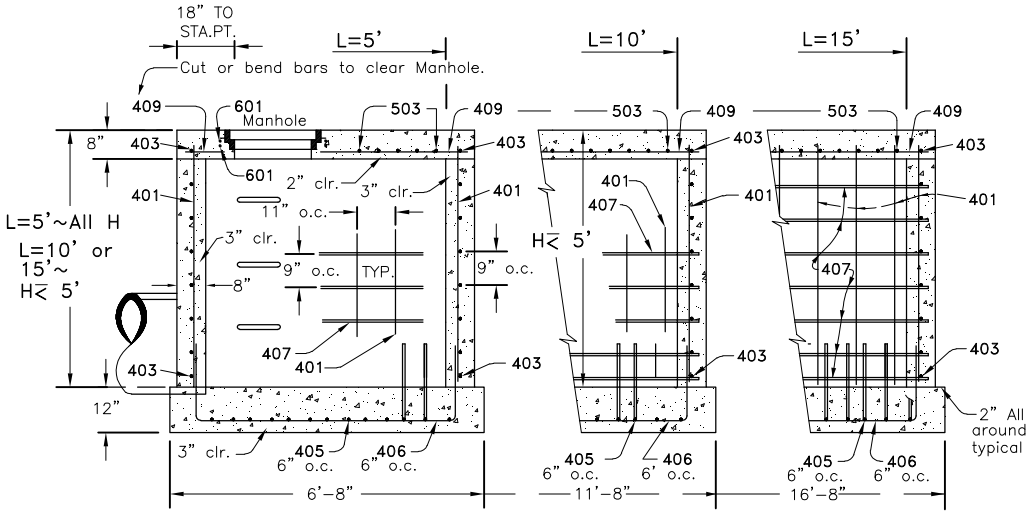

SECTION A–A REGULAR INLET

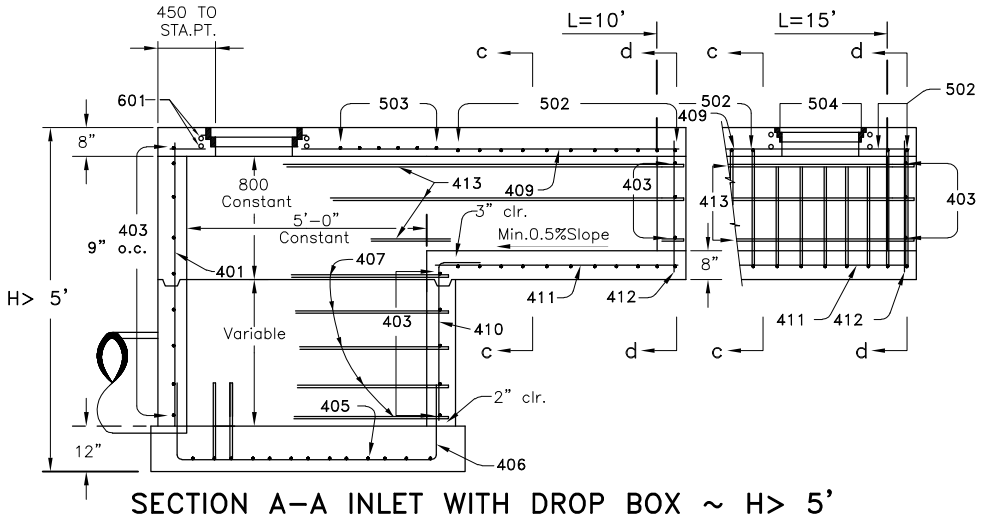

SECTION A–A INLET WITH DROP BOX ~ H> 5'

N.T.S.

	STANDARDS & SPECIFICATIONS	REVISED:	CURB INLET TYPE R SHEET 1 OF 4
DATE:		DRAWING NO. 400–36	