NOTES:

1. ALL JOINTS TO BE SET IN FLEXIBLE BUTYL RESIN SEALING COMPOUND AND PLASTERED WITH MORTAR 5/8" THICK AND EXTENDING 4" EACH SIDE OF JOINT INSIDE AND OUTSIDE.
2. MORTAR ON RISER RINGS IS ACCEPTABLE.
3. MANHOLES INSTALLED OUTSIDE OF STREET RIGHT-OF-WAY SHALL HAVE LOCKING COVERS.
4. "SEWER" TO BE IMPRINTED ON COVER.
5. FOR PIPE 36" AND LARGER, OR WHERE CONDITIONS SUCH AS MULTIPLE PIPES WARRANT, A CONCRETE BOX BASE WILL BE REQUIRED. (SEE CDOT STANDARD DRAWING M-604-20)

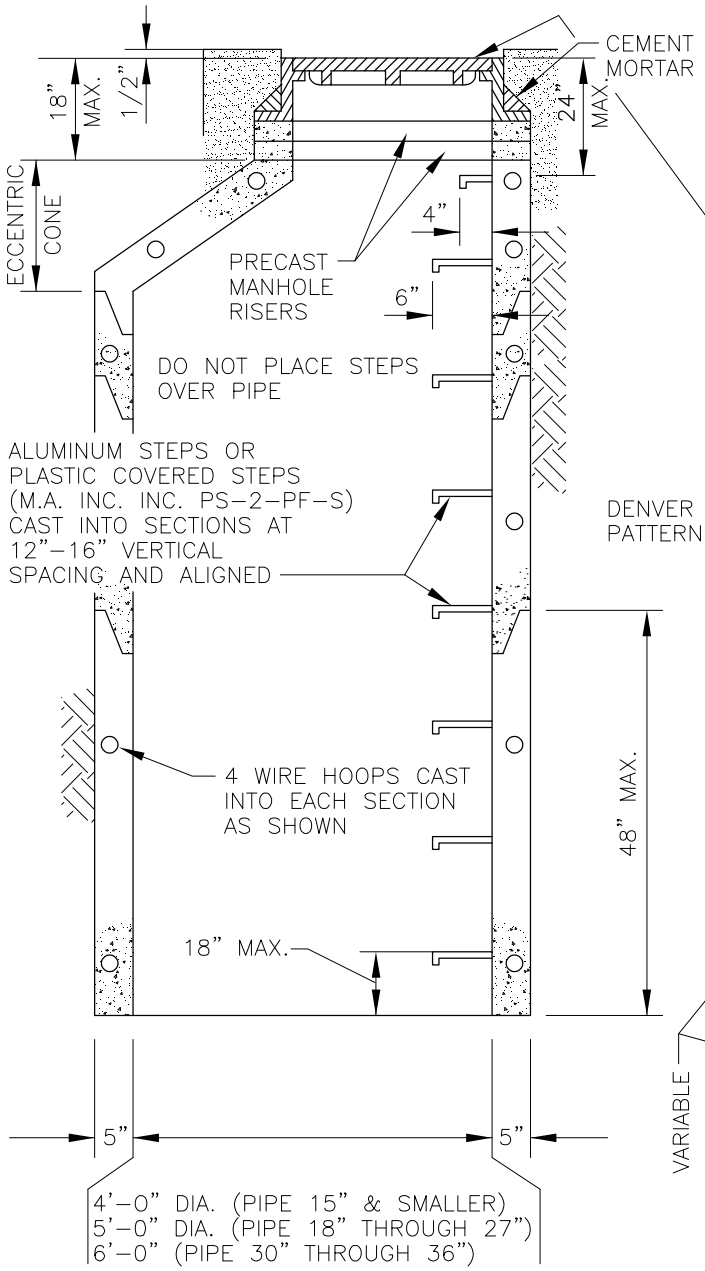

TYPICAL MANHOLE SECTION WITH ECCENTRIC CONE

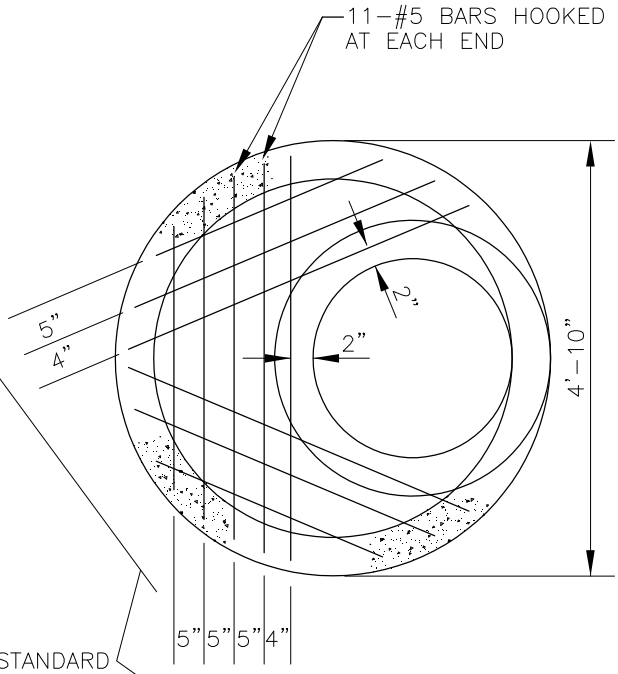

PLAN

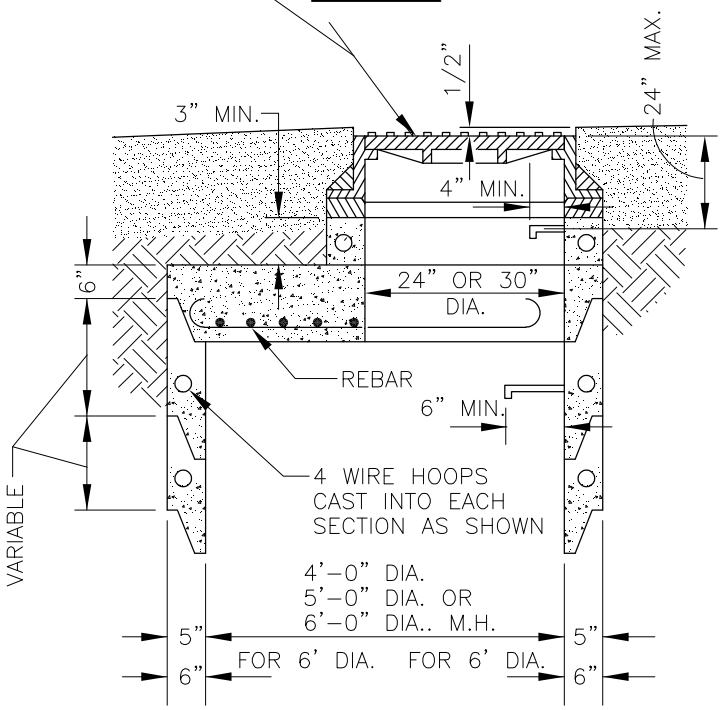

ALTERNATE FLAT TOP

N.T.S.

	STANDARDS & SPECIFICATIONS	REVISED:	MANHOLE BARRELS AND ALTERNATE TOPS
DATE:		DRAWING NO. 400-34	