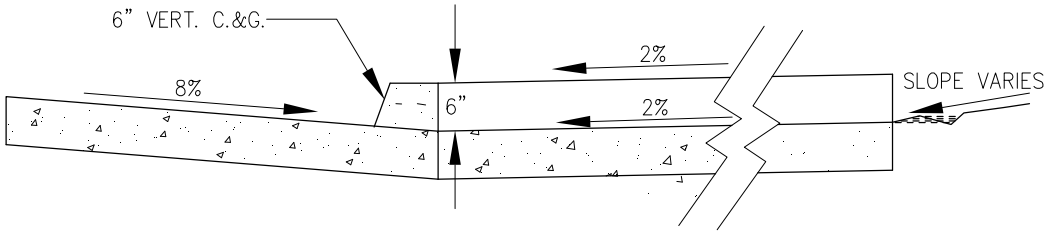

SECTION B–B

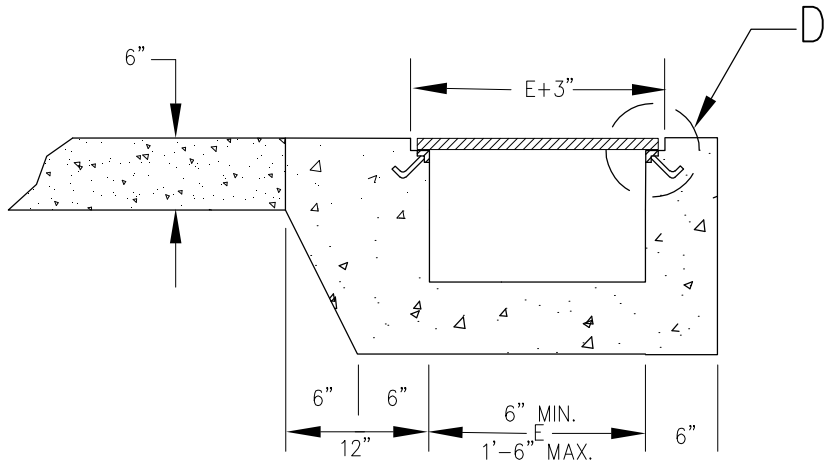

SECTION C–C

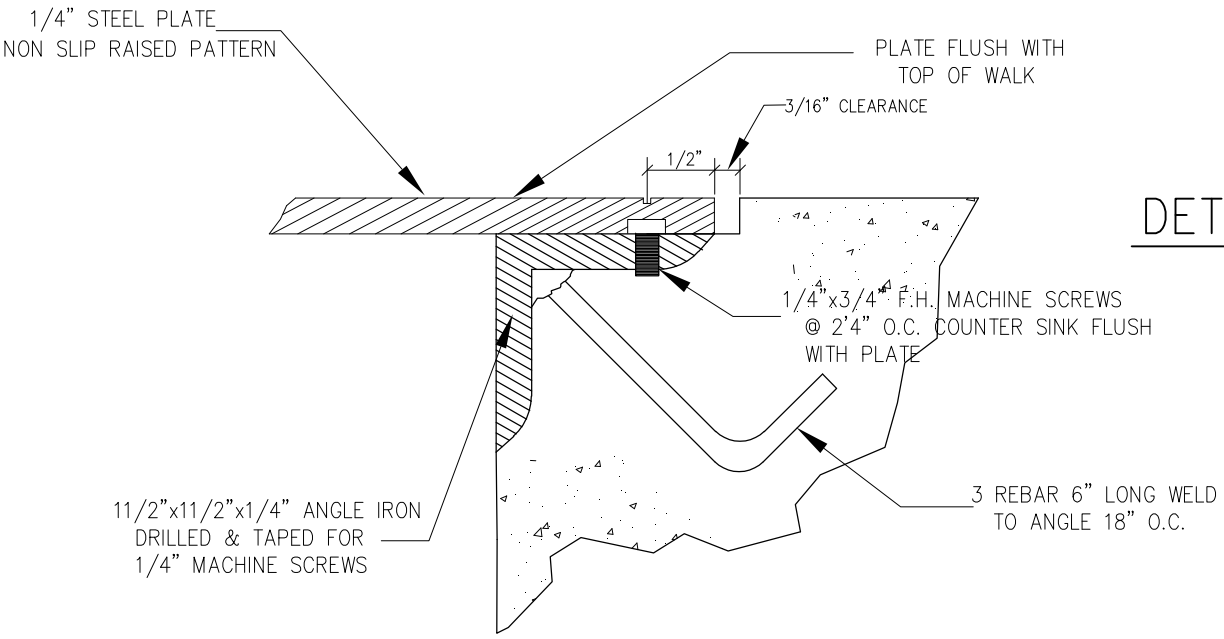

DETAIL D

MULTIPLE CHASE

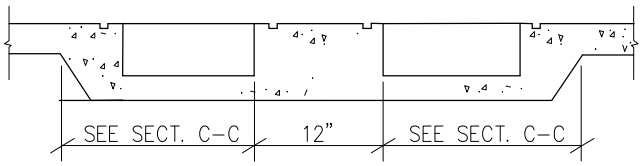

N.T.S.

	STANDARDS & SPECIFICATIONS	REVISED:	CHASE DRAIN DETAILS
DATE:		DRAWING NO. 400–31	