(A) ORIFICE PLATE DETAILS

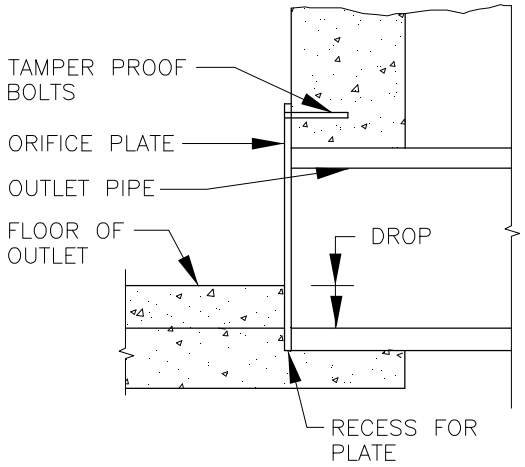

SECTION A–A

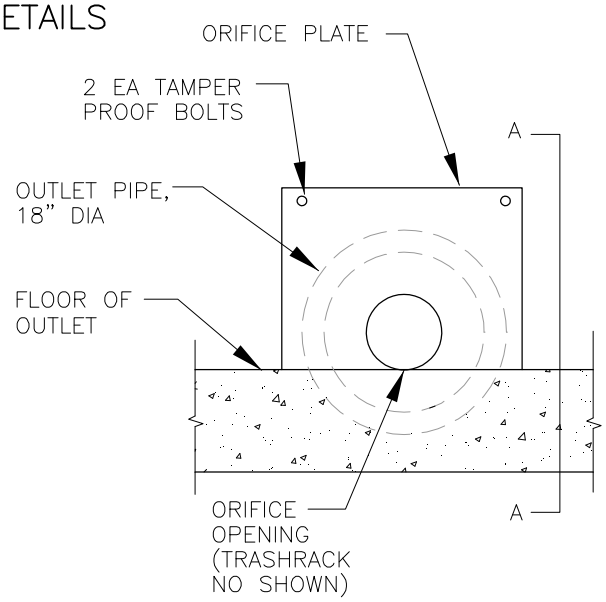

NOTE: TRASHRACK CAPACITY TO BE 10 TIMES ORIFICE CAPACITY

(B) TRASHRACK AREA REQUIREMENTS

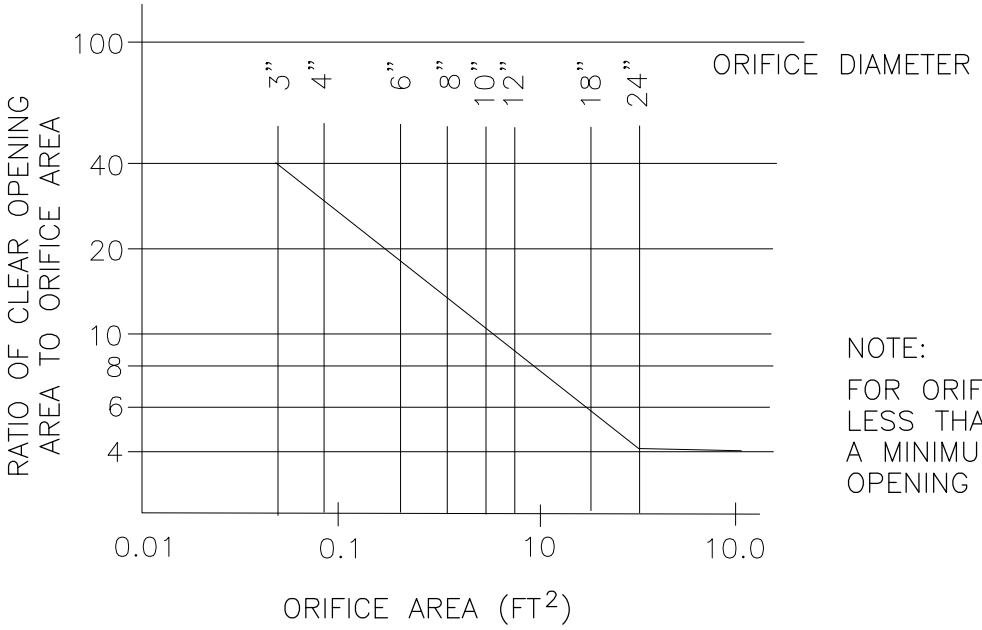

NOTE:

FOR ORIFICE DIAMETER LESS THAN 3", USE A MINIMUM CLEAR OPENING OF 2 FT^2

N.T.S.

	STANDARDS & SPECIFICATIONS	REVISED:	DETENTION POND DETAILS
DATE:		DRAWING NO. 400–28	