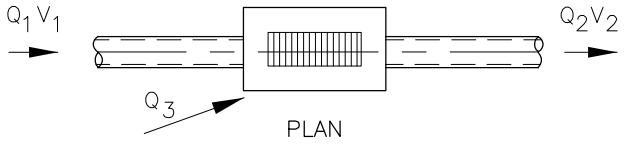

PLAN

USE EQUATION 400–4
Kj = 0.05

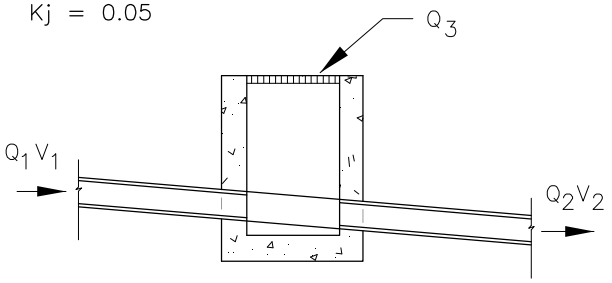

SECTION

CASE I
INLET OR STRAIGHT THROUGH
MANHOLE ON MAIN LINE

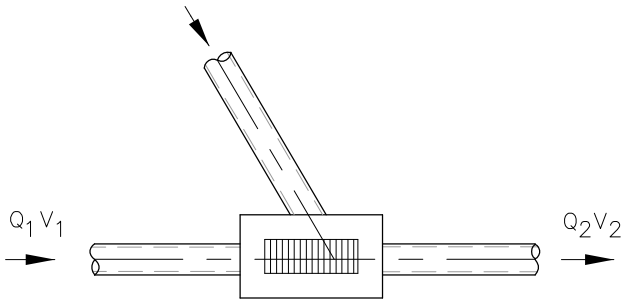

PLAN

USE EQUATION 400–8
Kj = 0.25

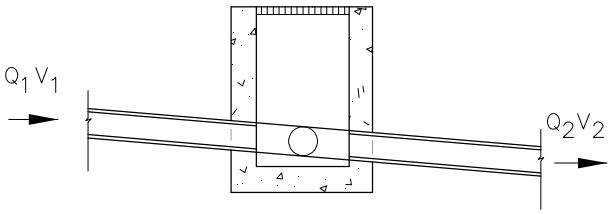

SECTION

CASE II
INLET ON MAIN LINE
WITH BRANCH LATERAL

CASE III

Ø°	Kj
22–1/2	0.75
45	0.50
60	0.35
90	0.25
NO LATERAL	SEE CASE I

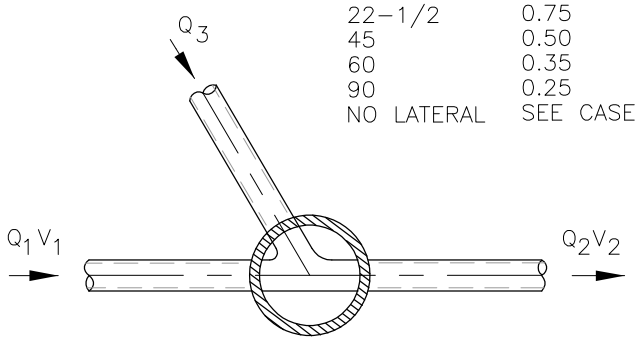

USE EQUATION 400–8

PLAN

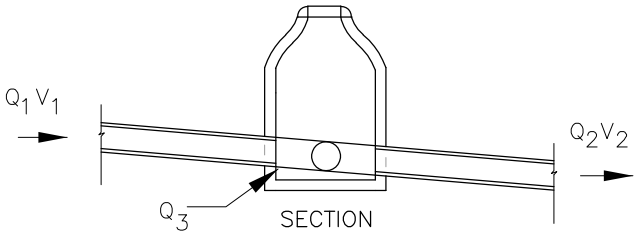

SECTION

CASE III
MANHOLE ON MAIN LINE
WITH Ø° BRANCH LATERAL

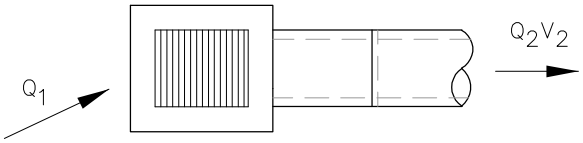

PLAN

USE EQUATION 400–4
Kj = 1.25

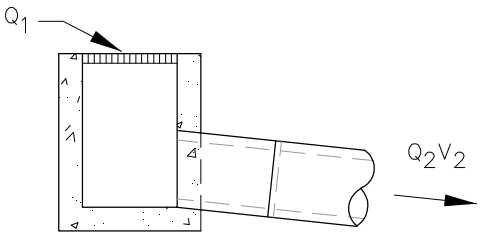

SECTION

CASE IV
INLET OR MANHOLE AT
BEGINNING OF LINE

N.T.S.

	STANDARDS & SPECIFICATIONS	REVISED:	MANHOLE JUNCTION LOSSES
DATE:		DRAWING NO. 400–22	