EXPANSION/CONTRACTION

(a) EXPANSION (K_e)

θ*	$\frac{D_2}{D_1}=3$	$\frac{D_2}{D_1}=1.5$
10	0.17	0.17
20	0.40	0.40
45	0.86	1.06
60	1.02	1.21
90	1.06	1.14
120	1.04	1.07
180	1.00	1.00

* THE ANGLE θ IS THE ANGLE IN DEGREES BETWEEN THE SIDES OF THE TAPERING SECTION

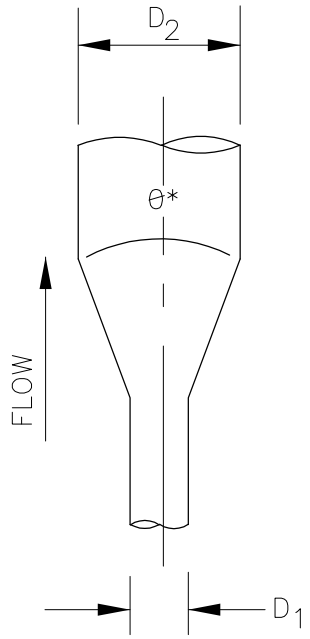

(b) PIPE ENTRANCE FROM RESERVOIR

BELL-MOUTH $H_L = 0.04 \frac{V^2}{2g}$

SQUARE EDGE $H_L = 0.5 \frac{V^2}{2g}$

GROOVE END U/S FOR CONCRETE PIPE $H_L = 0.2 \frac{V^2}{2g}$

(c) CONTRACTION (K_c)

$\frac{D_2}{D_1}$	K_c
0	0.5
0.4	0.4
0.6	0.3
0.8	0.1
1.0	0

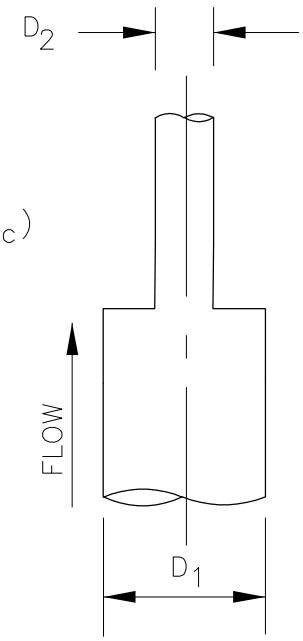

N.T.S.

	STANDARDS & SPECIFICATIONS	REVISED:	STORM SEWER ENERGY LOSS COEFFICIENT
DATE:		DRAWING NO. 400-19	