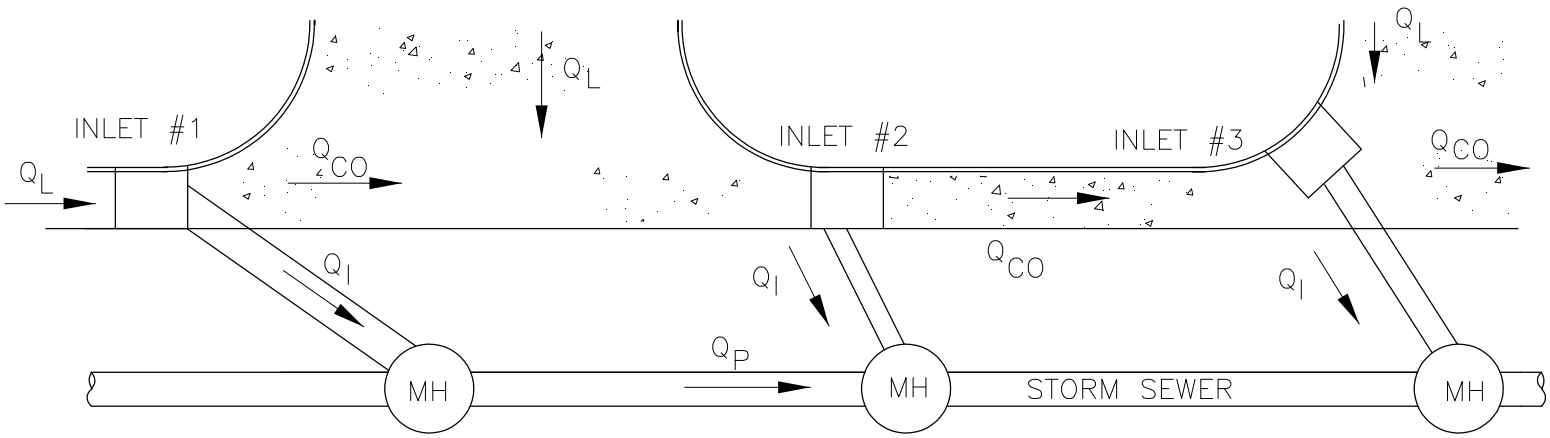


LEGEND:

$Q_L$ = LOCAL RUNOFF FOR DESIGN STORM TRIBUTARY TO DESIGNATE INLET (CFS)
$Q_I$ = RUNOFF INTERCEPTED BY INLET (CFS)
$Q_{CO}$ = CARRY OVER RUNOFF PAST INLET (CFS)
$Q_T$ = TOTAL RUNOFF AT INLET = $Q_L + Q_{CO}$
$Q_P$ = RUNOFF IN PIPE

SUMMARY OF FLOWS FOR DESIGN EXAMPLE #4

| INLET | $Q^*$ ALLOW | $Q_L$ | $Q_{CO}$ | $Q_T$ | $Q_I$ | $Q_{CO}$ | Q SEWER | COMMENTS |
|---|---|---|---|---|---|---|---|---|
| NO. 1; 15' TYPE R | 8.6 | 8 | 0 | 8 | 6.4 | 1.6 | 6.4 | INLET ON GRADE |
| NO. 2; 10' TYPE R | 7.2 | 4 | 1.6 | 5.6 | 3.7 | 1.9 | 10.1 | INLET ON GRADE |
| NO. 3; 10' TYPE R | 10.4 | 8 | 1.9 | 9.9 | 9.9 | 0 | 20.0 | INLET IN SUMP CONDITION |

* MAXIMUM ALLOWABLE INLET CAPACITY AT MAXIMUM ALLOWABLE GUTTER CAPACITY, FROM FIGURE 400-28

N.T.S.

# INLET DESIGN EXAMPLES FOR MINOR STORM

STANDARDS & SPECIFICATIONS

REVISED:

DATE:

DRAWING NO. 400-17