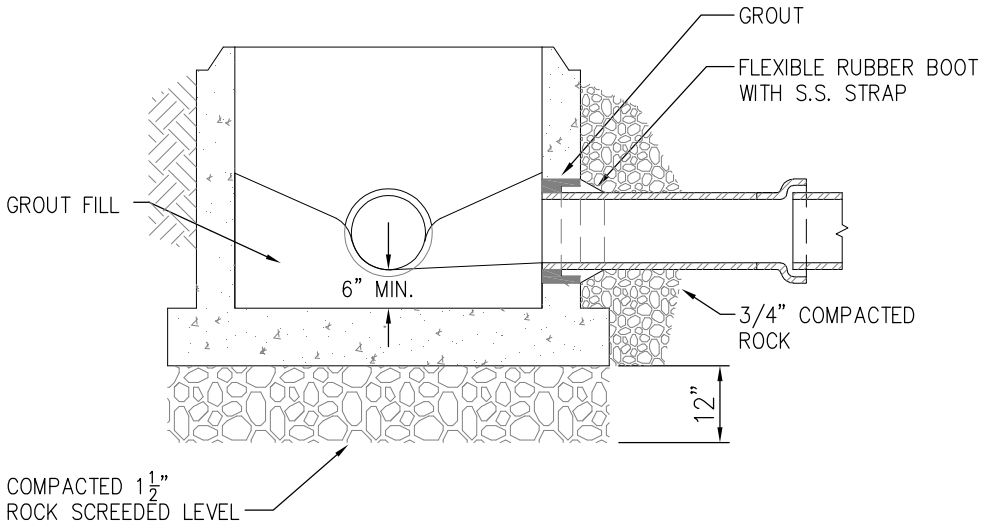

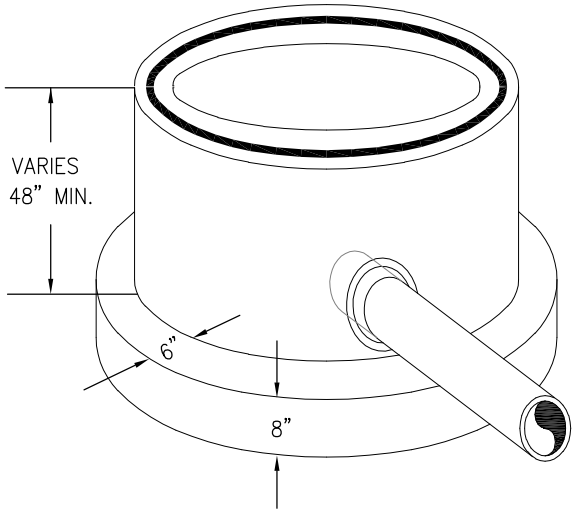

*NOTE: 1) PREPOURED INVERTS ARE NOT ALLOWED
2) AVOID 12" BARREL SECTIONS.

	STANDARDS & SPECIFICATIONS	REVISED:	PRECAST CONCRETE MANHOLE BASE
DATE:		DRAWING NO. 300-09	