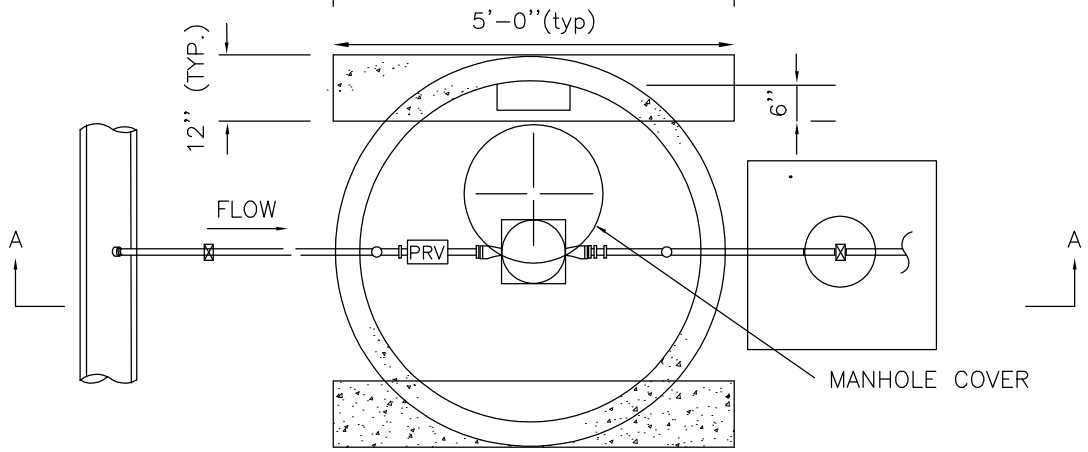

SECTIONAL PLAN

NO SCALE

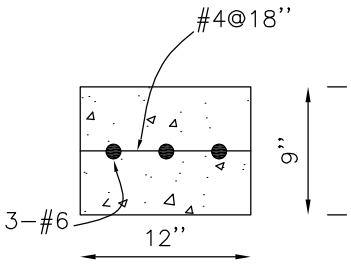

FOOTING DETAIL

2 (REQUIRED)

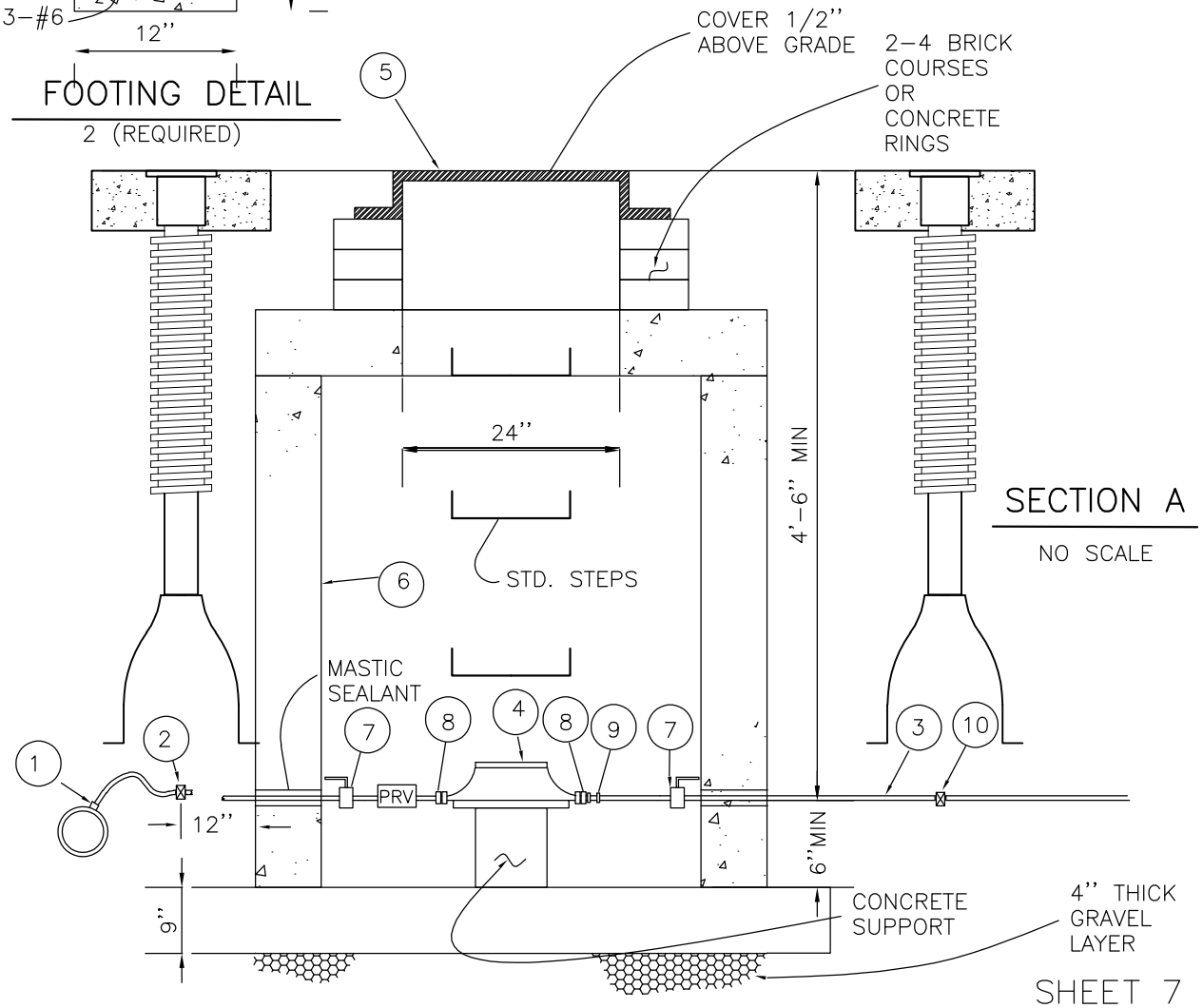

SECTION A

NO SCALE

SHEET 7 OF 9

	STANDARDS & SPECIFICATIONS	REVISED:	IRRIGATION METERS 1-1/2" THRU 2" WITH PRV
DATE:		DRAWING NO. 200-25	