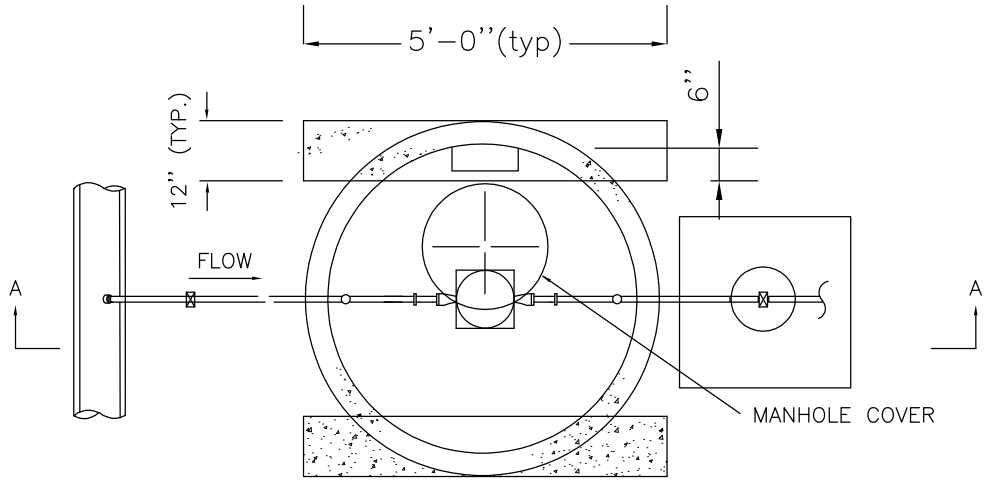

SECTIONAL PLAN

NO SCALE

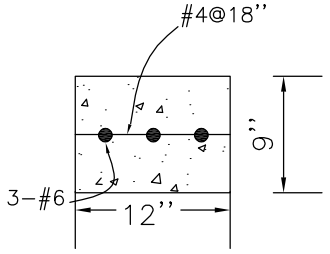

FOOTING DETAIL

2 (REQUIRED)

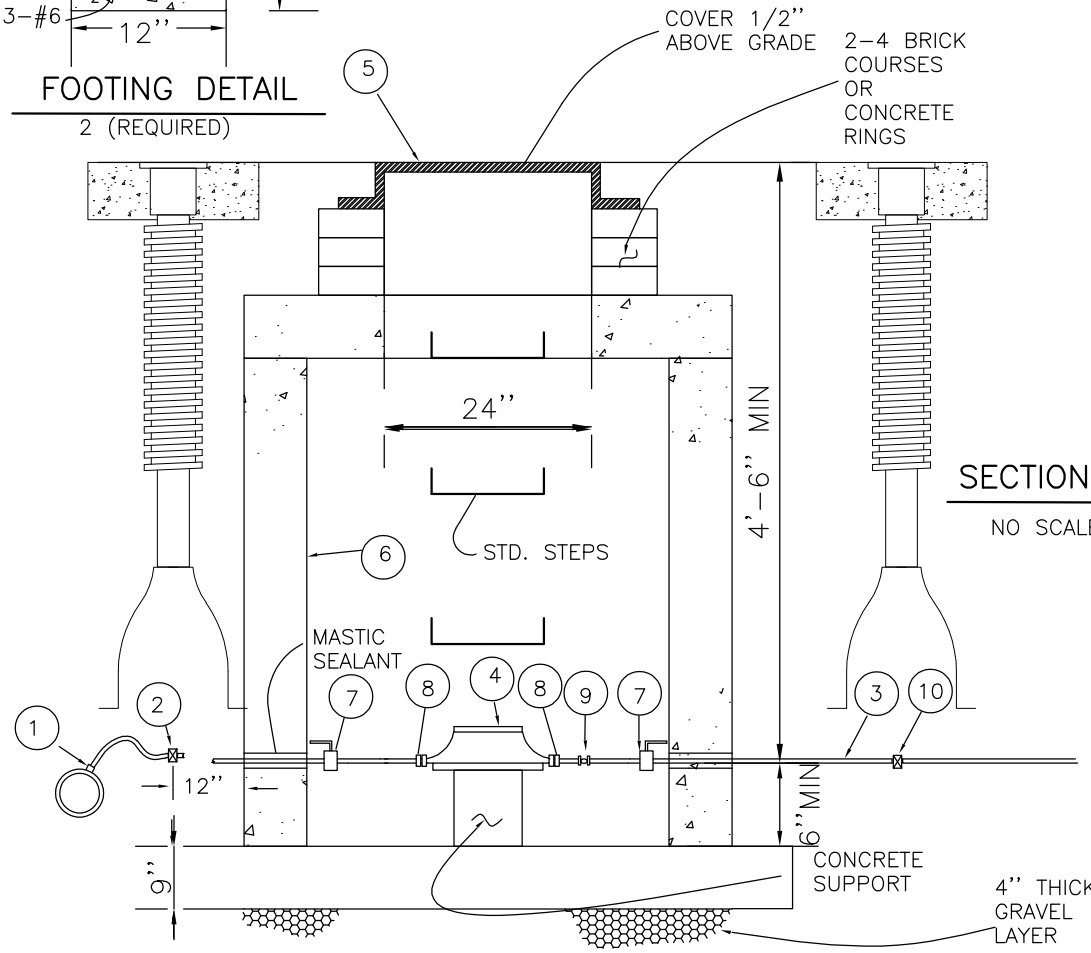

SECTION A

NO SCALE

SHEET 1 OF 2

	STANDARDS & SPECIFICATIONS	REVISED:	DOMESTIC METER PIT PRESSURE REDUCING 1-1/2" AND UP
DATE:		DRAWING NO. 200-14	