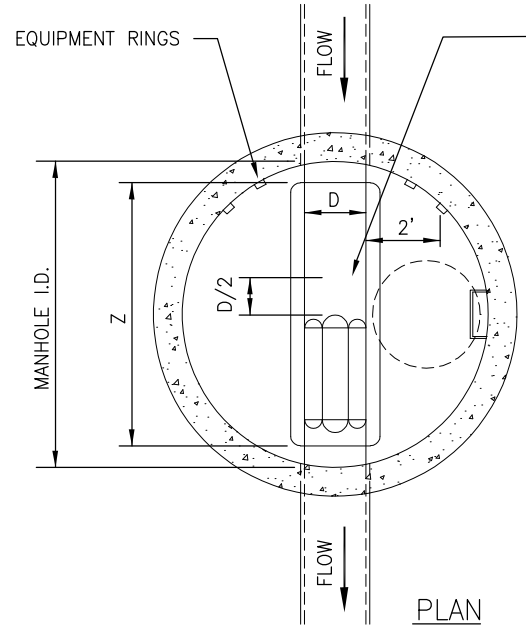

PLAN

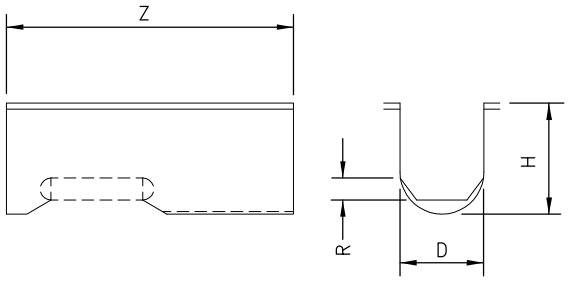

PALMER – BOWLUS FLUME

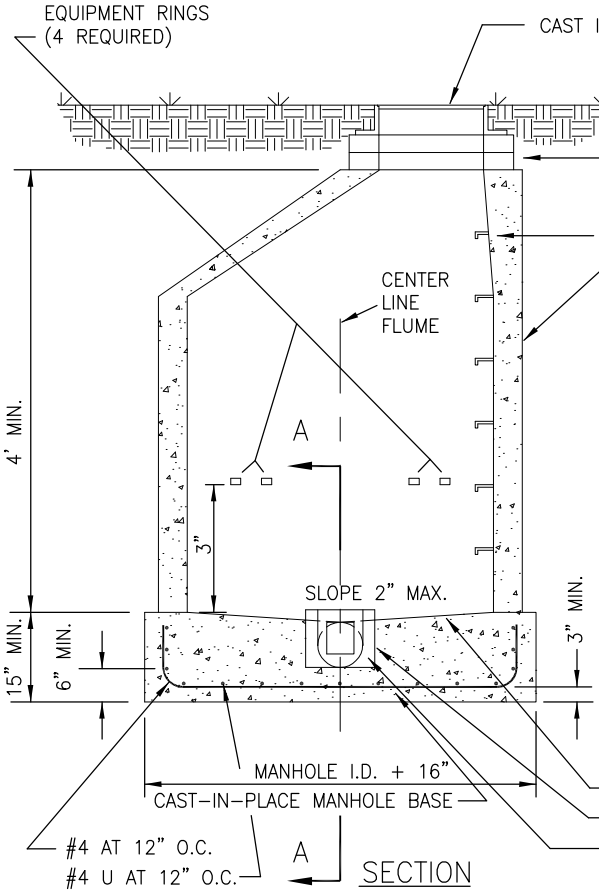

SECTION

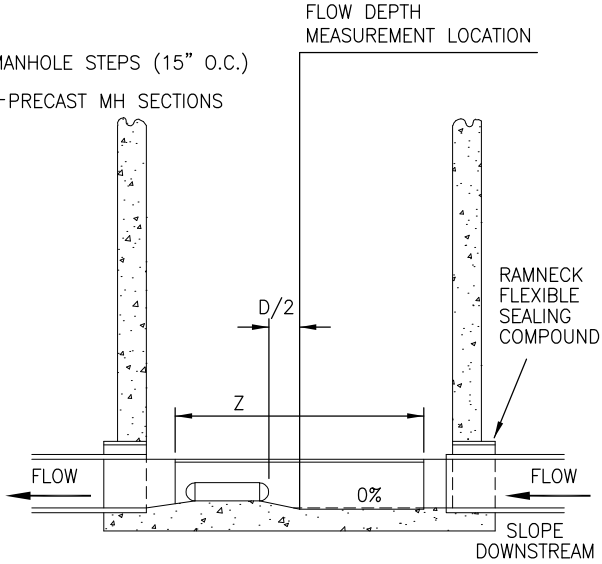

SECTION A–A

	STANDARDS & SPECIFICATIONS	REVISED:	WASTE METERING AND SAMPLING
DATE:		DRAWING NO. 200–11	