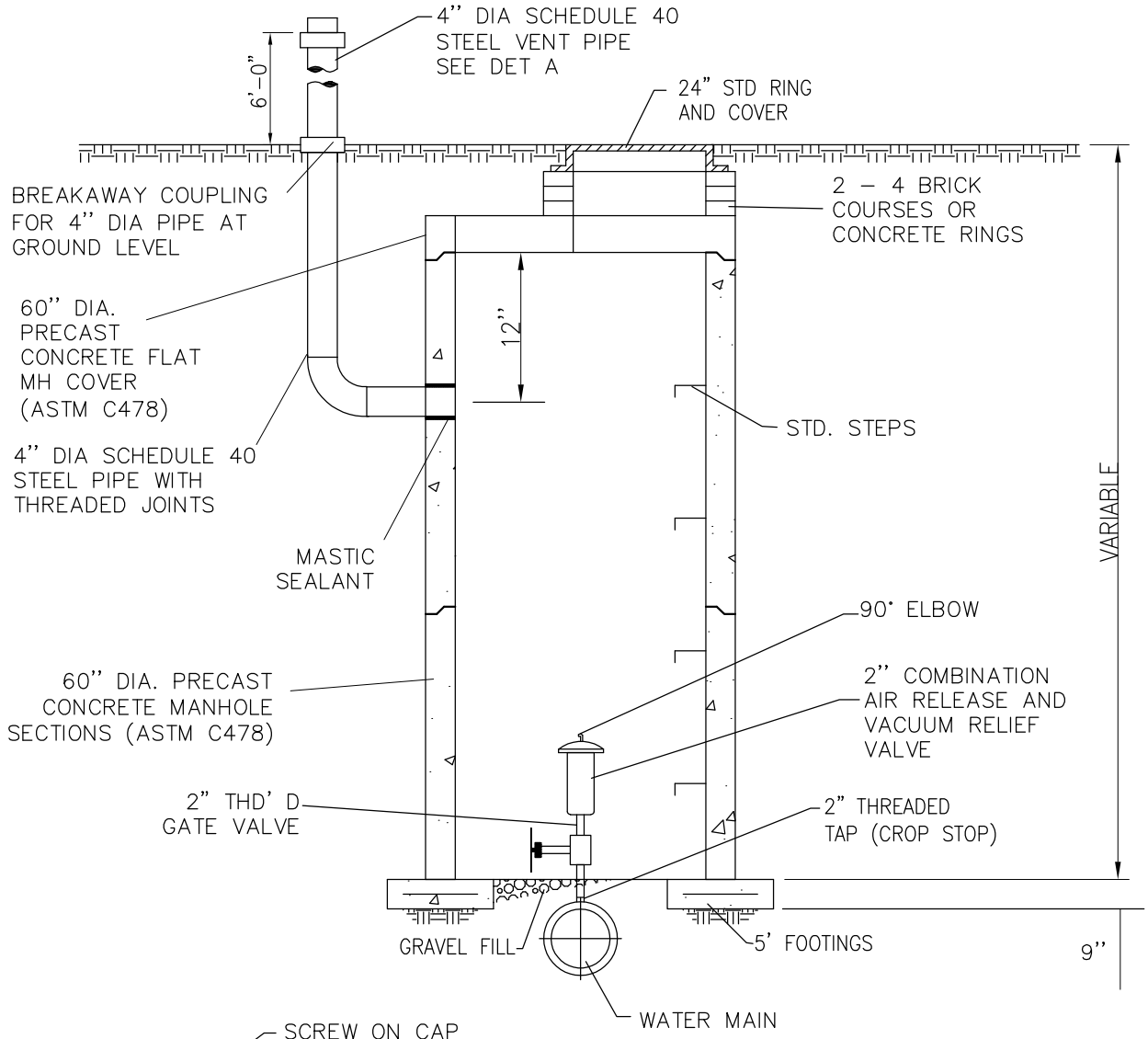

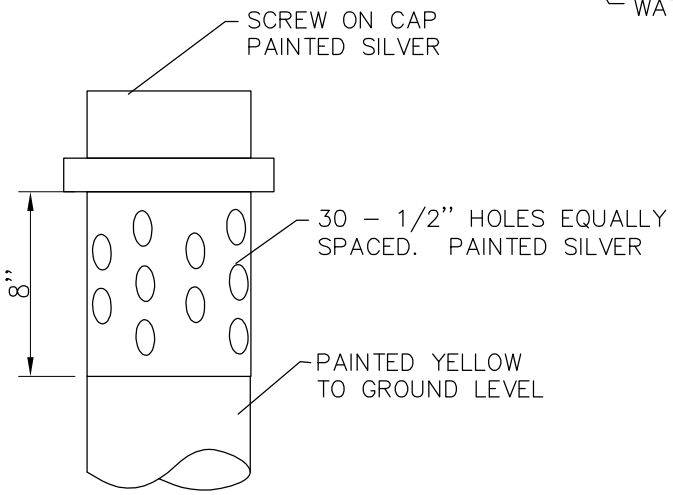

DETAIL A

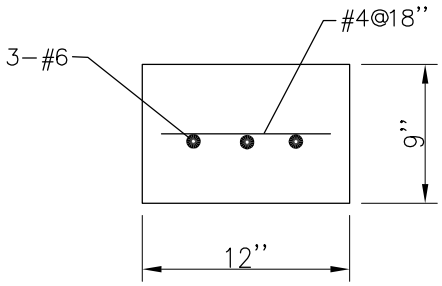

FOOTING DETAIL

NOTE: ALL METAL SURFACES SHALL BE COATED WITH TWO COATS OF HEAVY COAL TAR PAINT.

	STANDARDS & SPECIFICATIONS	REVISED:	AIR RELEASE AND VACUUM RELIEF VALVE
DATE:		DRAWING NO. 200–01	